Rotary union for 2 media

RU-2-22

- For closed or open center cylinders (not for ZHVD-DFR)
- Media: air + oil/air + coolant

Application/customer benefits

- Rotary union for media supply for rotating cylinders.
  Universal for air + oil/air + coolant
- Can also rotate dry (without medium applied)

Technical features

Rotary union for 2 media. Port A for air, oil and coolant, Port B for air.

note: The medium must be free of contamination
Filter 25 µm requested

Standard equipment

Rotary union RU-2-22
Anti rotation pinblok
Adapter for tube Ø 12 mm (ID =10mm)

Option

Adapter for tube Ø 10 mm (ID = 8 mm) Id. No. 043703
Adapter for tube Ø 8 mm (ID = 6 mm) Id. No. 043681

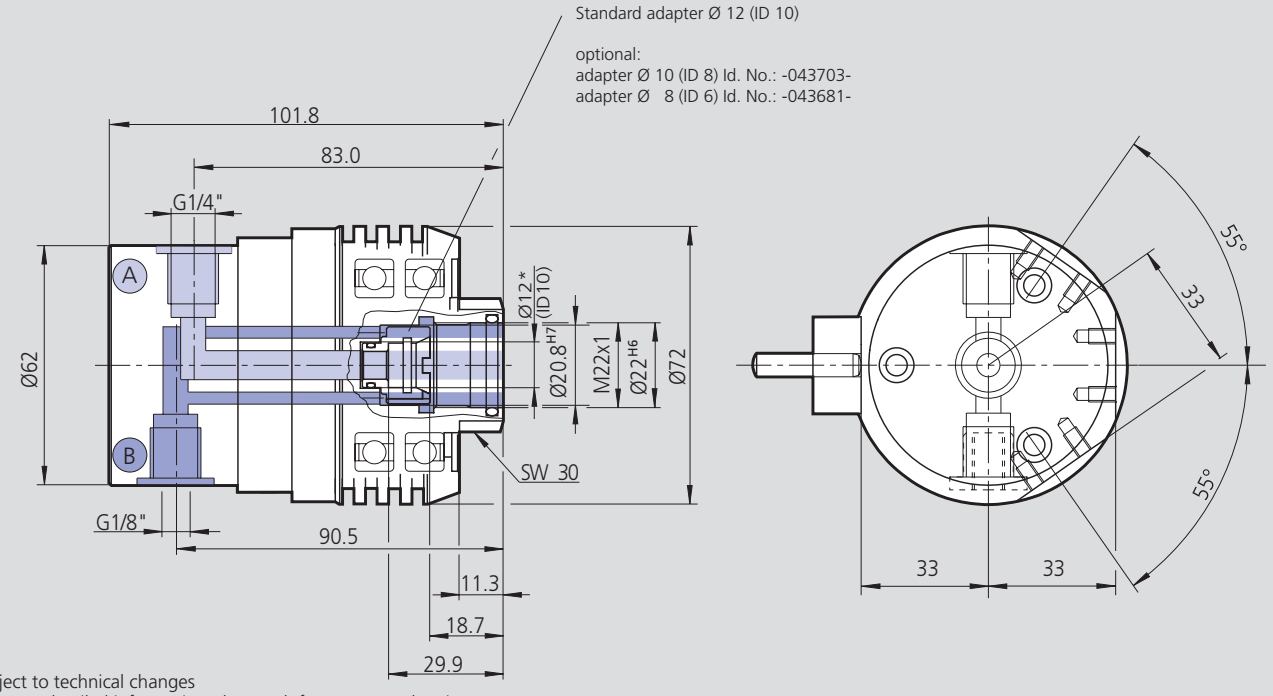

Subject to technical changes
For more detailed information please ask for customer drawing

Technical data

SMW-AUTOBLOK Type	Id. No.	max. speed r.p.m.	max. pressure port A media: air, oil, coolant	max. pressure port B media: air only	Weight	Filter requested
RU-2-22	044970	4000	40 bar/580 psi	10 bar/145 psi	0.94 kg	25 µm
		4500	35 bar/507.5 psi	10 bar/145 psi		
		5000	30 bar/435 psi	10 bar/145 psi		
		5500	25 bar/362.5 psi	10 bar/145 psi		
		6500	20 bar/290 psi	10 bar/145 psi		

8